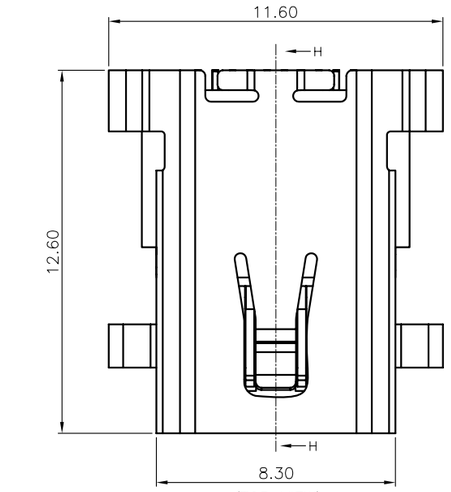

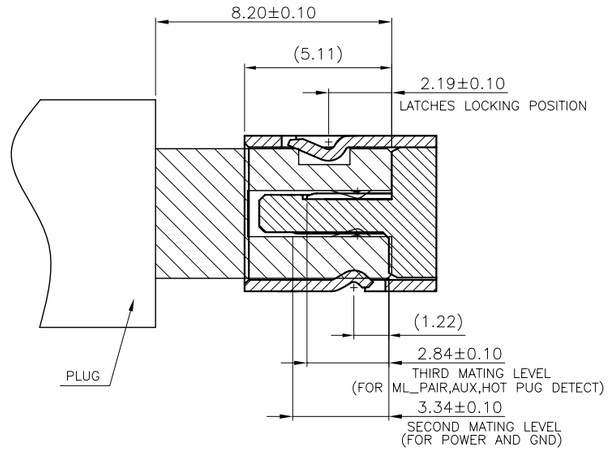

B MATING DRAWING

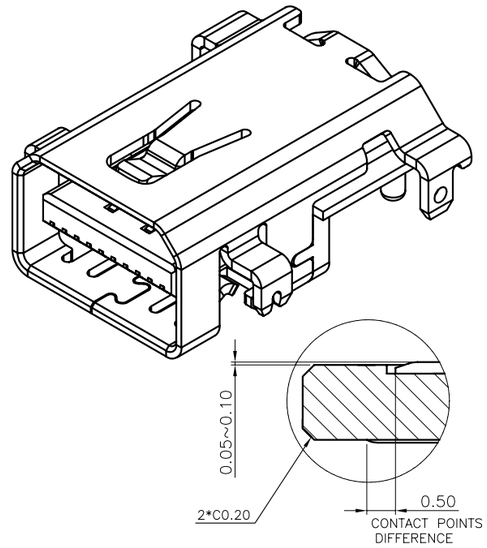

DETAIL AC
B SCALE 2:1

1.MATERIAL:
1-1 HOUSING:LCP OR HIGH TEMPERATURE THERMOPLASTIC, UL 94V-0, BLACK COLOR.
1-2 TERMINAL:COPPER ALLOY
1-3 SHELL:STEEL ALLOY

2.PLATING:
2-1 TERMINAL:
GOLD PLATED (SEE TABLE) ON CONTACT AREA, 2.54μm [100μ″] MIN. MATTE-TIN ON SOLDER TAIL, WITH ENTIRE CONTACT UNDERPLATED 1.27μm [50μ″] MIN. NICKEL.
2-2 SHELL:50μ″ MIN. NICKEL ALL OVER

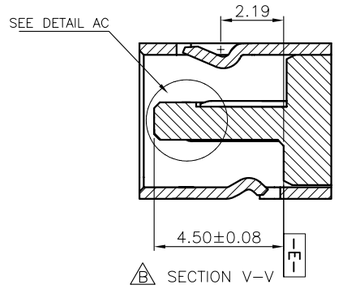

B SECTION V-V

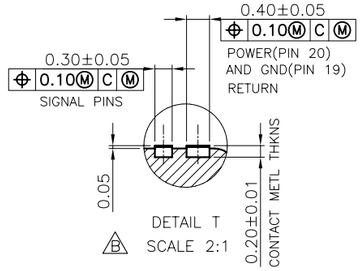

DETAIL T
B SCALE 2:1

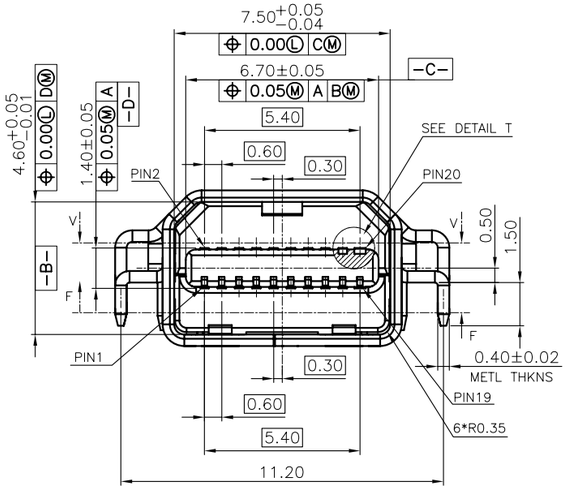

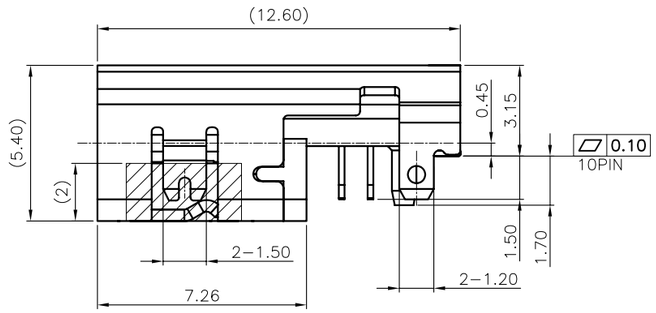

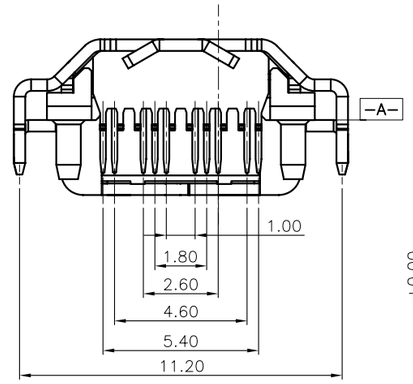

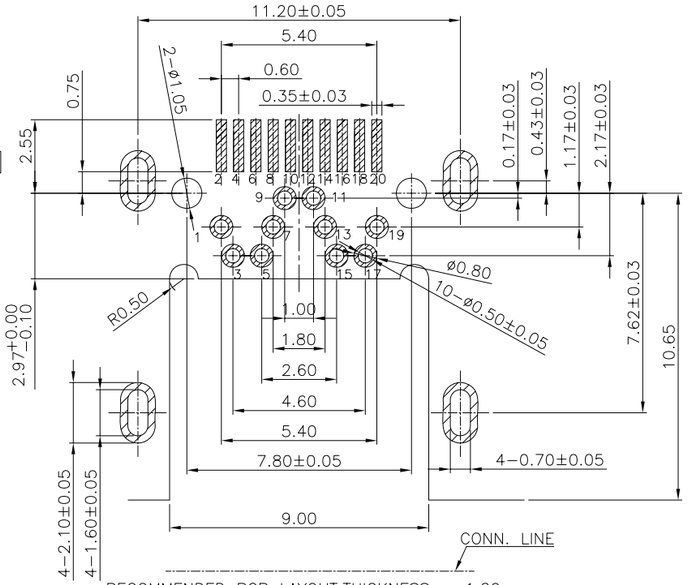

RECOMMENDED PCB LAYOUT,THICKNESS = 1.20 mm
TOLERANCE = ±0.05
(TOP VIEW)

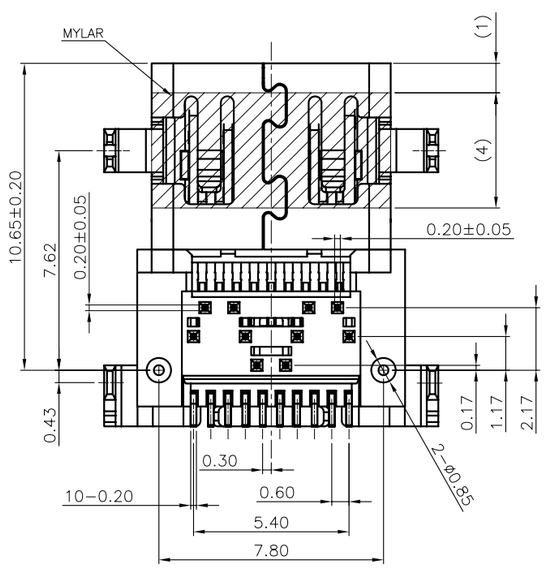

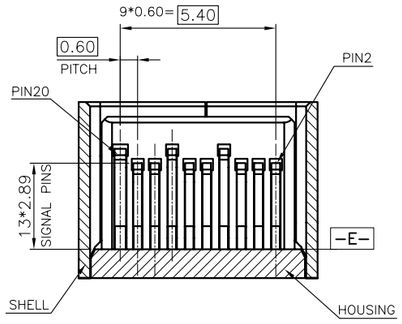

B SECTION V-V

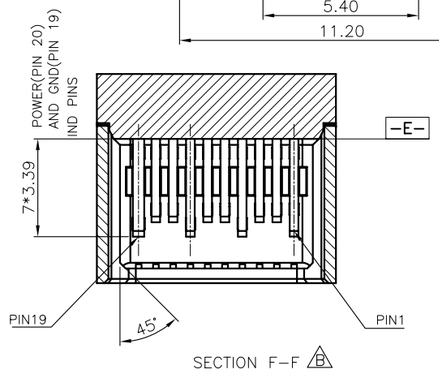

SECTION F-F B

RoHS2+HF	0.254μm [10μ″]	22-D0060-3003-0
	GF	22-D0060-1003-0
GP TYPE	MIN. GOLD THICKNESS	PART NUMBER

REV.	DESCRIPTION	ECN NO.	DWN.	CHK.	APVD.	DATE
B	ADD DIM	N1610542	XINYE	Jimmy 2016.10.1 08:[illegible] +08'00'	Kevin Liu 2016.10.1 08:51:20 +08'00'	10-18'16
A	FIRST RELEASED	N1404130	XINYE	Jimmy	Kevin	04-10'14

TOLERANCES UNLESS OTHERWISE SPECIFIED
X. ±0.50
X.X ±0.30
X.XX ±0.20
X.XXX ±0.15
ANGEL ±3°

MATERIAL: SEE Note
FINISH: SEE Note

TITLE: Mini DP 總高5.4，中心高0.50，DIP沉板，20PIN (Mini dsp-8)
UNIT: mm
ORIGINAL DATA: 04-02'13
DWN.: Bingwu
CHK.: Jimmy
APVD.: Kevin

tconn precision

PART NO.: SEE TABLE
SCALE: 1:1
SIZE: A3
REV.: B
DWG. NO.: C-22-D006X
SHEET: 1 OF 2

C-Drawing(Ass'y)
A3 Horizontal Type

RP0410A1

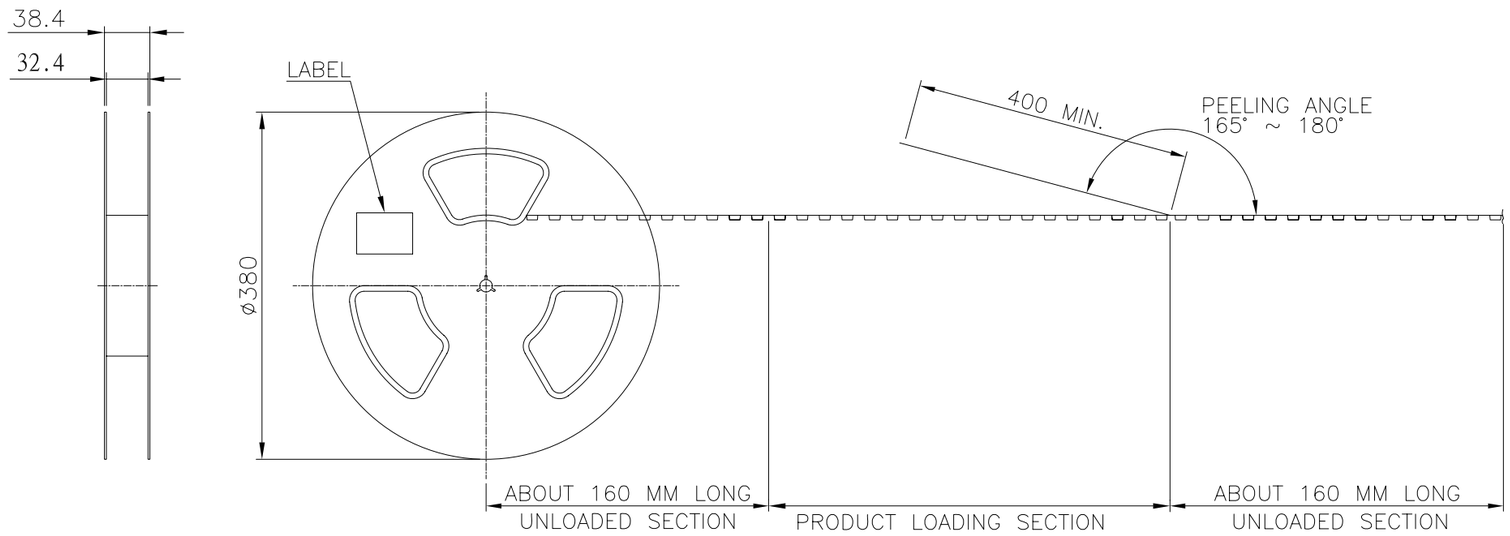

GATHER MATERIAL DIRECTION
收料方向

INPUT MATERIAL DIRECTION
客户放料方向

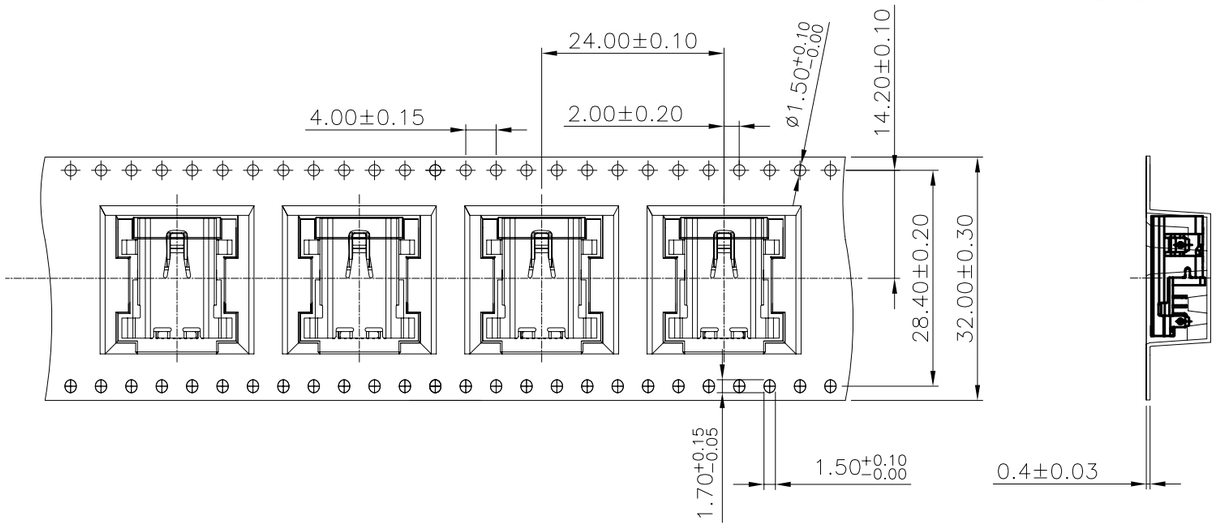

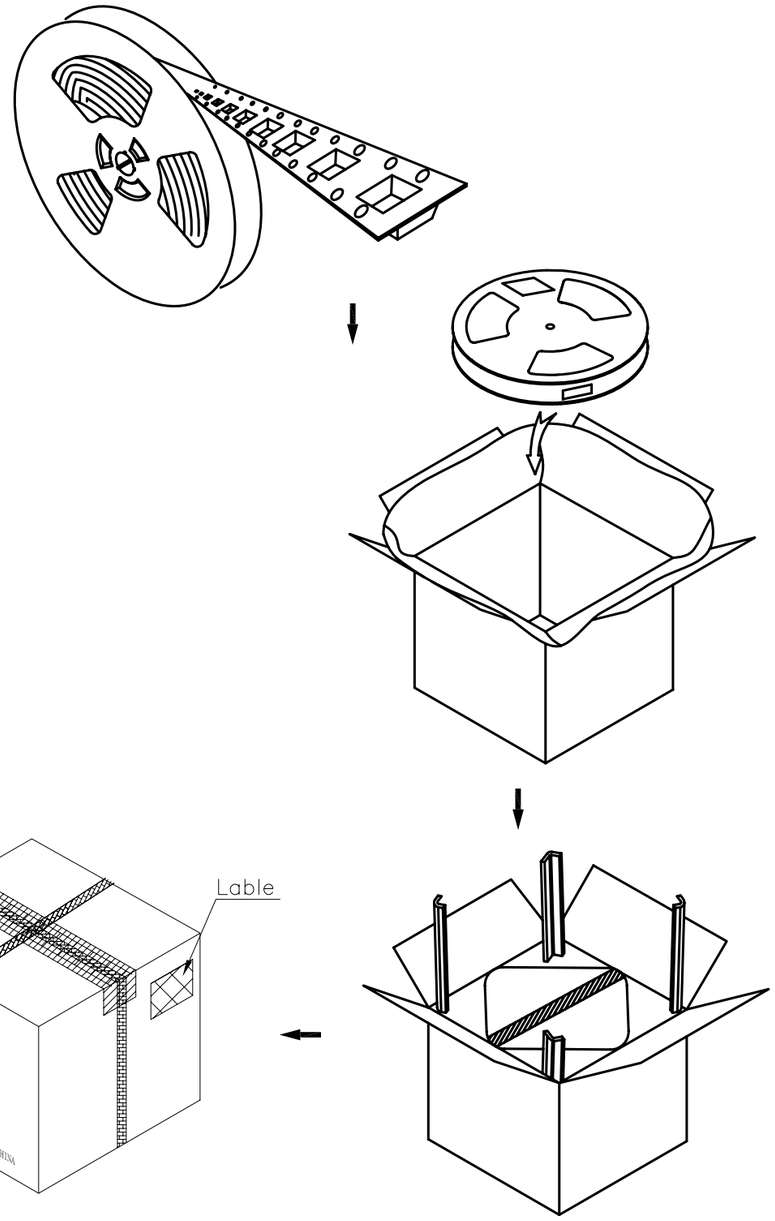

NOTE:

1. MATERIAL:
   BOX: FIBREBOARD, CORRUGATED, DOUBLE WALL.
   TAPE: POLYSTYRENES, HEAT-RESISTANT TEMPERTURE: 120°C, BLACK COLOR.
   REEL: POLYSTYRENES, HEAT-RESISTANT TEMPERTURE: 70°C, BLUE COLOR.
   BAG: POLYETHYLENE, HEAT-RESISTANT TEMPERTURE: 100°C.
2. PEELING STRENGTH: 0.2 ~ 1.3 N (20 ~ 130 GRAMS)
3. PEELING SPEED: 300 mm/min.
4. EACH BAG SHALL BE INCLUDED DESICCANT.

450	10	4500 PCS	--KG	--KG
PCS/ REEL	REELS/ CARTON	QUANTITY	GROSS WEIGHT	NET WEIGHT

REV.	DESCRIPTION	ECN NO.	DWN.	CHK.	APVD.	DATE
B	ADD DIM	N1610542	XINYE	Jimmy 2016.10.18 08:42:38 +08'00'	Kevin Liu 2016.10.18 09:51:29 +08'00'	10-18'16
A	FIRST RELEASED	N1404130	XINYE	Jimmy	Kevin	04-10'14

TOLERANCES UNLESS OTHERWISE SPECIFIED
X. ±0.50
X.X ±0.30
X.XX ±0.20
X.XXX ±0.15
ANGEL ±3°

MATERIAL: SEE NOTE

FINISH: SEE NOTE

TITLE: Mini DP 總高5.4，中心高0.5，DIP沉板，20PIN (Mini dsp-8)

UNIT: mm

ORIGINAL DATA: 01-22'13

DWN.: Bingwu

CHK.: Jimmy

APVD.: Kevin

tconn precision

PART NO.: SEE TABLE

SCALE: 1:1

SIZE: A3

REV.: B

DWG. NO.: C-22-D006X

SHEET 2 OF 2

C-Drawing(Ass'y)
A3 Horizontal Type

RP0410A1