CONFIDENTIAL:THESE DRAWINGS AND SPECIFICATIONS ARE THE PROPERTY OF T-CONN PRECISION CORPORATION. AND SHALL NOT BE REPRODUCED COPIED OR USED IN ANY MANNER WITHOUT THE PRIOR WRITTEN CONSENT OF T-CONN PRECISION CORPORATION.

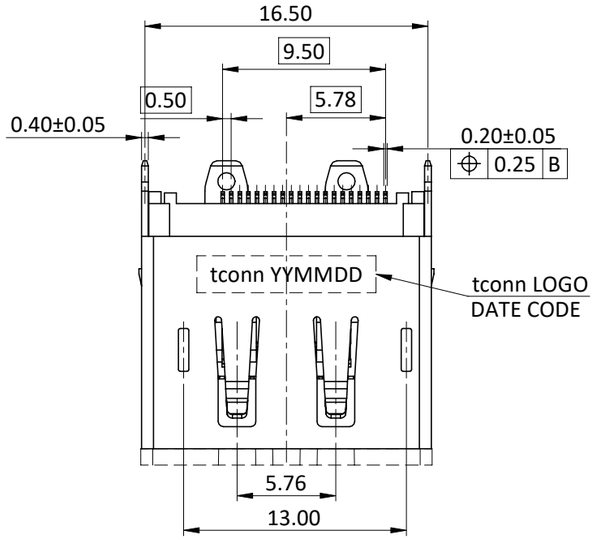

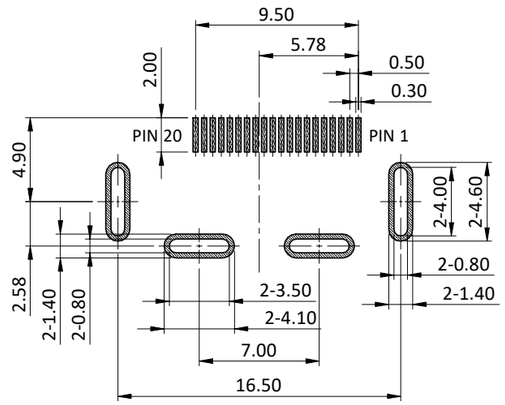

RECOMMENDED PCB LAYOUT(FRONT VIEW)
(DEFAULT DIMENSION TOL=±0.05mm)
(THICKNESS=1.2±0.10mm)

NOTE:

1. MATERIAL:
   1-1 HOUSING:LCP UL 94V-0 COLOR:BLACK.
   1-2 CAP:LCP UL 94V-0 COLOR:BLACK.
   1-3 TERMINAL:COPPER ALLOY T=0.20mm.
   1-4 SHELL:STAINLESS STEEL T=0.40mm.
2. FINISH:
   2-1 TERMINAL:GOLD (SEE TABLE) PLATED ON CONTACT AREA AND 2.54um [100u"] MIN. MATTE-TIN ON SOLDER TAIL,WITH ENTIRE CONTACT UNDERPLATED 1.27um [50u"] MIN.NICKEL.
   2-2 SHELL:1.27um [50u"] MIN. NICKEL PLATED.
3.ELECTRICAL PERFORMANCE:
   3-1 CONTACT RESISTANC:INITIAL CONTACE RESISTANCE EXCLUDING CONDUCTOR RESISTANCE:10 MILLIOHMS MAX.
   3-2 DIELECTRIC STRENGTH:
   UNMATED CONNECTORS APPLY 500V AC.
   MATED CONNECTOR APPLY 300V AC.
   3-3 INSULATION RESISTANCE:
   100 MEGA OHMS MIN.(UNMATED),10 MEGA OHMS MIN.(MATED).
4. MECHANICAL CHARACTERISTICS:
   4-1 INSERTION FORCE : 4.5Kgf MAX.
   4-2 WITHDRAWAL FORCE : 1.0~4.0Kgf.
5. DURABILITY:10,000 CYCLE.

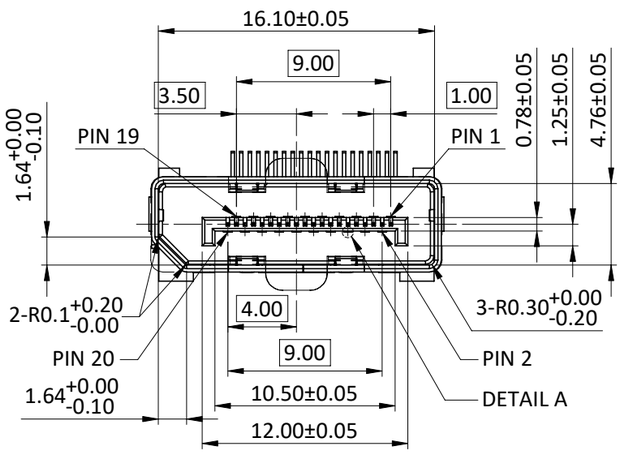

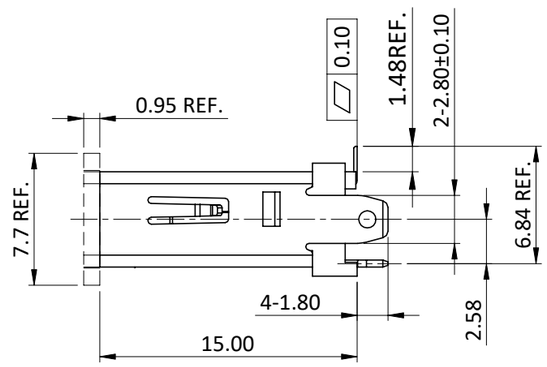

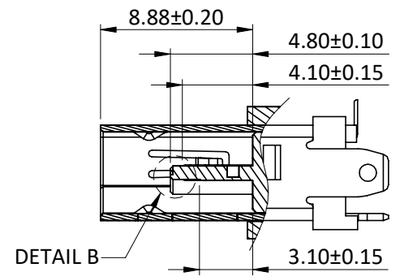

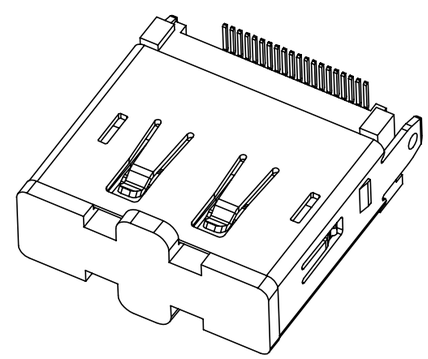

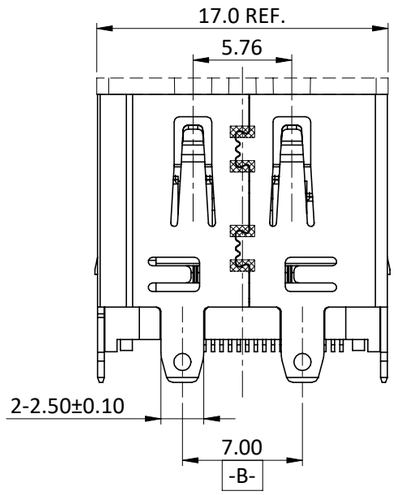

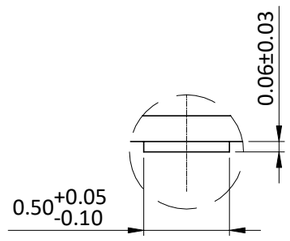

DETAIL A
SCALE 10:1

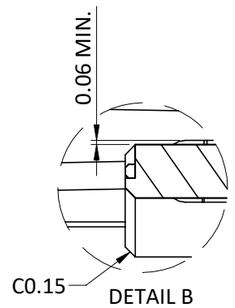

DETAIL B
SCALE 4:1

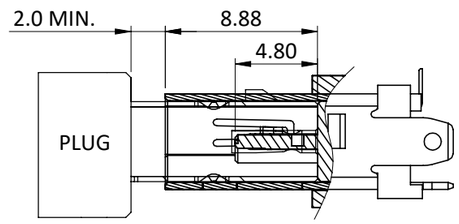

MATING DRAWING

GP TYPE	PLATING Au THICKNESS	PART NUMBER
RoHS2+HF	30u"	22-D1470-6A03-0
	15u"	22-D1470-5A03-0
	10u"	22-D1470-3A03-0
	5u"	22-D1470-2A03-0
	G/F	22-D1470-1A03-0

REV.	DESCRIPTION	ECN NO.	DWN.	CHK.	APVD.	DATE
A	FIRST RELEASED	N2212375	Xuesong	Jimmy 2022.12.12 16:58:+08'00'	Kevin Liu 2022.12.12 17:04:54 +08'00'	12-12'22

TOLERANCES UNLESS OTHERWISE SPECIFIED
X. ±0.50
X.X ±0.30
X.XX ±0.20
X.XXX ±0.15
ANGEL ±3°

MATERIAL: SEE TABLE

FINISH: SEE NOTE

TITLE: DISPLAY PORT 20PIN H=15.00mm REC SMT TYPE

UNIT: mm

ORIGINAL DATA: 12-12'22

DWN.: Xuesong

CHK.: Jimmy

APVD.: Kevin

T-CONN PRECISION

PART NO.: SEE TABLE

SCALE: 1:1

SIZE: A3

REV.: A

DWG. NO.: C-22-D147X

SHEET: 1 OF 2

CONFIDENTIAL:THESE DRAWINGS AND SPECIFICATIONS ARE THE PROPERTY OF T-CONN PRECISION CORPORATION. AND SHALL NOT BE REPRODUCED COPIED OR USED IN ANY MANNER WITHOUT THE PRIOR WRITTEN CONSENT OF T-CONN PRECISION CORPORATION.

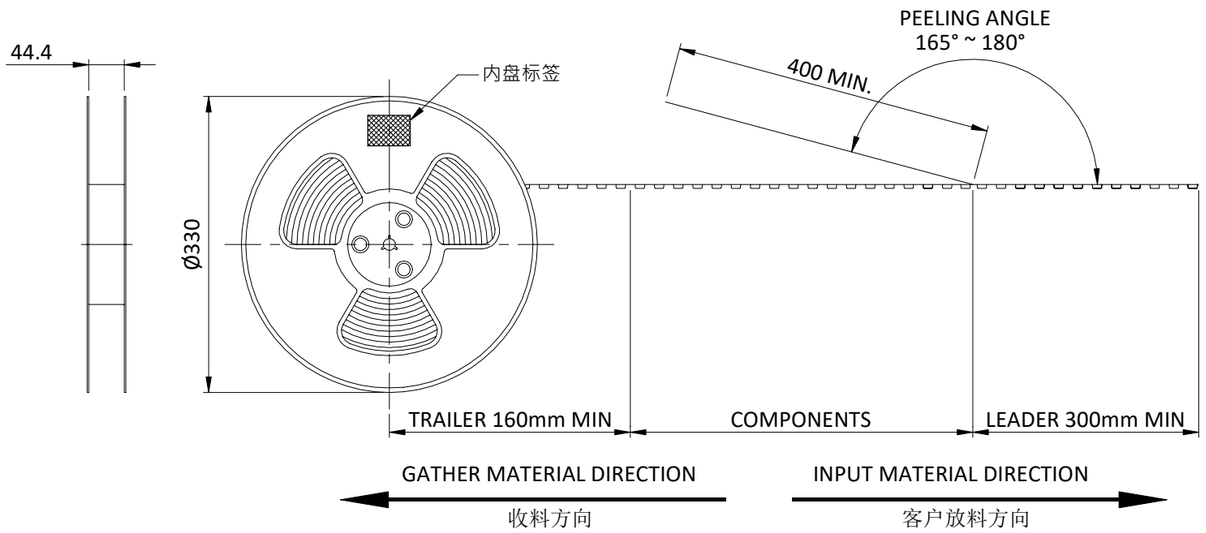

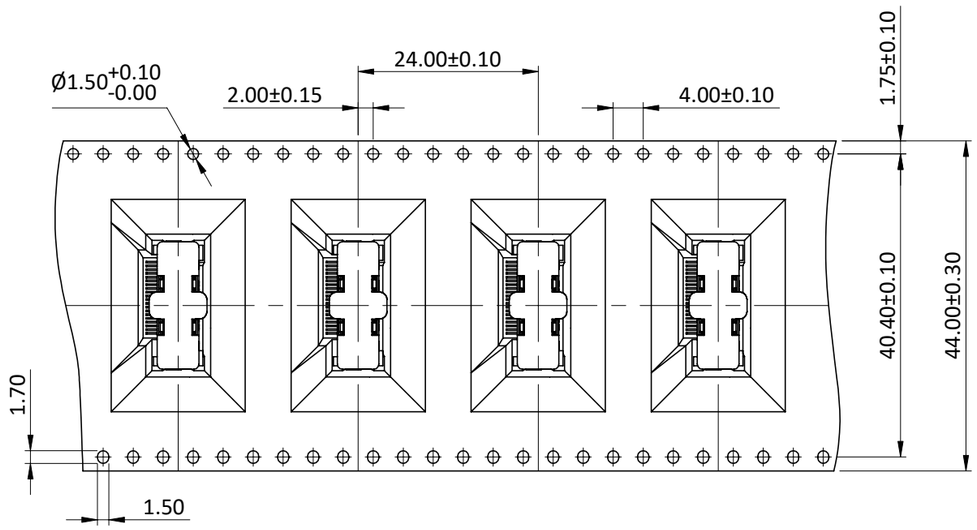

NOTE :

1. MATERIAL :
   BOX : FIBREBOARD, CORRUGATED, DOUBLE WALL.
   TAPE : POLYSTYRENES, WHITE COLOR.
   REEL : POLYSTYRENES, BLUE COLOR.
   BAG : POLYETHYLENE,
2. PEELING STRENGTH : 0.1 ~ 1.3 N (10 ~ 130 GRAMS)
3. PEELING SPEED : 300 mm/min.
4. EACH BAG SHALL BE INCLUDED DESICCANT.
5. CARRIER TAPES, COVER TAPES, REELS AND TAPED COMPONENTS MUST MEET THE REQUIREMENTS DEFINED PER EIA-481-B.

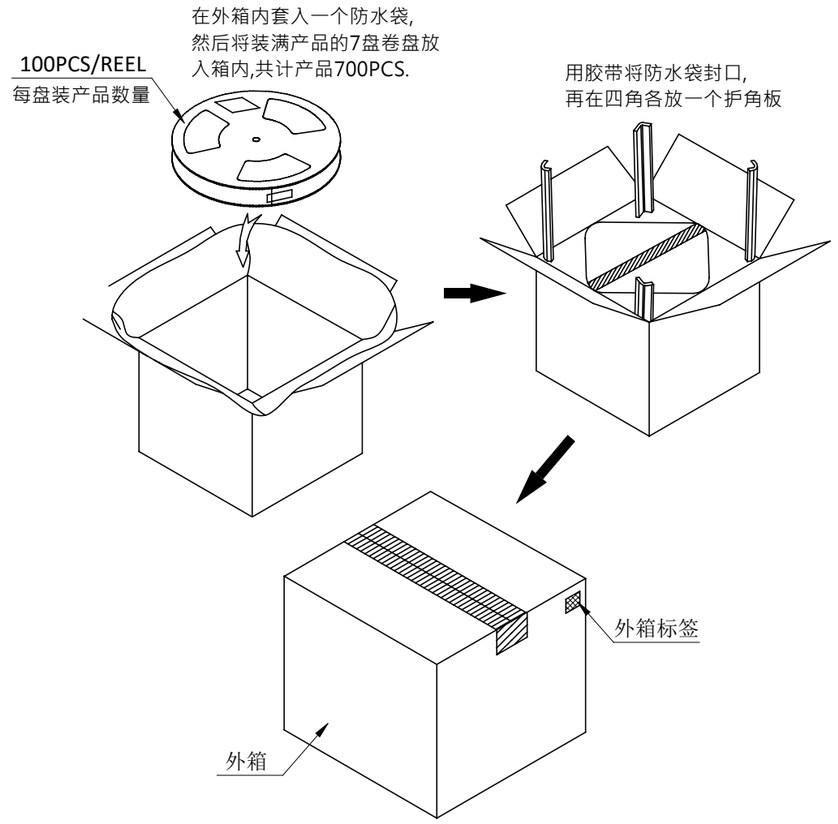

100	7	700	- - KG	- - KG
PCS/ REEL	REELS/ BOX	QUANTITY	GROSS WEIGHT	NET WEIGHT

REV.	DESCRIPTION	ECN NO.	DWN.	CHK.	APVD.	DATE
A	FIRST RELEASED	N2212375	Xuesong	Jimmy 2022.12.12 16:58:44 +08'00'	Kevin Liu 2022.12.12 17:05:21 +08'00'	12-12'22

TOLERANCES UNLESS OTHERWISE SPECIFIED
X. ±0.50
X.X ±0.30
X.XX ±0.20
X.XXX ±0.15
ANGEL ±3°

MATERIAL: SEE TABLE

FINISH: SEE NOTE

TITLE: DISPLAY PORT 20PIN H=15.00mm REC SMT TYPE

UNIT: mm

ORIGINAL DATA: 12-12'22

DWN.: Xuesong

CHK.: Jimmy

APVD.: Kevin

T-CONN PRECISION

PART NO.: SEE TABLE

SCALE: 1:1

SIZE: A3

REV.: A

DWG. NO.: C-22-D147X

SHEET: 2 OF 2